Acme Sanitary Ware Co. Ltd.
1/F, Acme Building, 22-28 Nanking Street, Kowloon, Hong Kong
Tel: 2388 7171 Fax: 2710 8012
Email: acme@acmesanitary.com.hk
Website: www.acmesanitary.com.hk
Since 1949

GROHE Pure Freude an Wasser

PROJECT		REF		REV	ITEM CODE	
LOCATION		DATE			PAGE	

SANITARY WARE SPECIFICATION SHEET

Item Descriptions	GROHE (Germany) "Eurocube Joy" Single lever chrome plated bath/shower mixer 1/2" with feather control
Dimensions	L220 x W170 x 97 mm
Model	23666000
Finish	Chrome Plated
Country of origin	Germany
Manufacturer	GROHE Limited
Supplier	Acme Sanitary Ware Co. Ltd Mr. Eric Wong/ Mr. Don Yuen
Contact Tel/Fax	(852) 2388-7171 / (852) 2710-8012
E-mail	acme@acmesanitary.com.hk
Website	www.acmesanitary.com.hk

Illustration/ Drawing

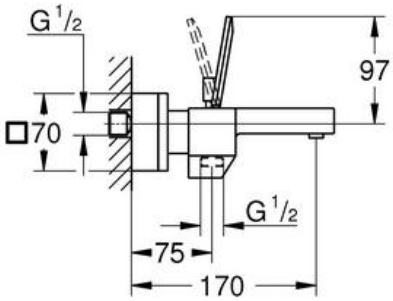

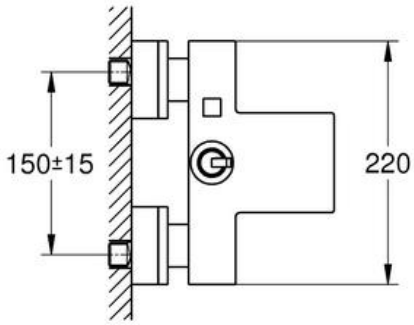

"Eurocube Joy"
Single-lever bath/shower mixer 1/2 〃

- wall mounted
- metal lever
- **GROHE FeatherControl** Joystick cartridge
- **GROHE StarLight** chrome finish
- **GROHE XL Waterfall**
- integrated non-return valve in the shower outlet 1/2"
- S-unions
- protected against backflow

Note: YouTube HK (GROHE Eurodisc Joy) https://www.youtube.com/watch?v=j7ulmjQH4eM
YouTube HK (23666000 Unboxing) https://www.youtube.com/watch?v=MG8oYMK95m0

** All information of the above is for the reference only. No prior notice is made if any changes.*

Acme Sanitary Ware Co. Ltd.
1/F, Acme Building, 22-28 Nanking Street, Kowloon, Hong Kong
Tel: 2388 7171 Fax: 2710 8012
Email: acme@acmesanitary.com.hk
Website: www.acmesanitary.com.hk
Since 1949

GROHE Pure Freude an Wasser

PROJECT		REF		REV	ITEM CODE	
LOCATION		DATE			PAGE	

SANITARY WARE SPECIFICATION SHEET

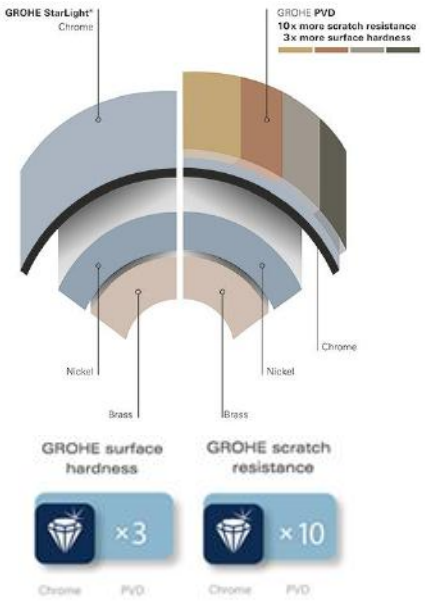

Easy to clean thanks to the GROHE StarLight chrome coating

Just wipe the tap down with a dry cloth – the ultra smooth surface finish is scratch resistant and ensures a lasting luminous sheen. You'll save plenty of time cleaning while your tap always looks shiny and new.

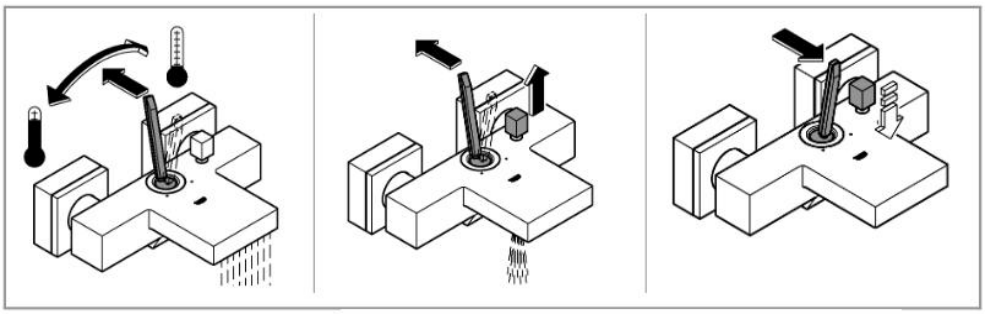

Smooth joystick handling for effortless precision and ultimate convenience to last a lifetime. The brand new GROHE FeathercControl cartridge brings joystick control to a whole new level. Using state-of-the-art coated ceramic discs and an innovative sealing, the GROHE engineers have created a joystick cartridge with a wider volume and temperature angle – for a more precise control – with the same silky smooth operation as our renowed GROHE SilkMove® cartridge.

Only GROHE mixers deliver the unique GROHE FeatherControl experience. The solid smooth handling of our joystick-lever mixers perfectly expresses the quality and superiority of our brand.brand.

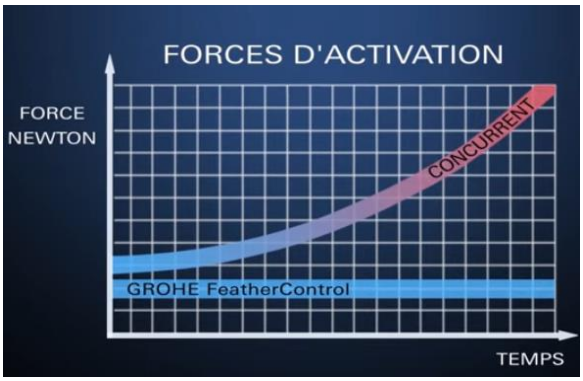

GROHE FeatherControl

The wide FeatherControl temperature angle ensures more precise temperature control.

Effortless fingertip control and silky smooth operation, thanks to the superior ceramic disc-coating.

Even after years FeatherControl guarantees the same smooth operation as on day one.

Note:

** All information of the above is for the reference only. No prior notice is made if any changes.*